Application Report
SLAA320–July 2006

Ultrasound Receive Chain Evaluation Module

Grant Christiansen *Signal Chain Applications*

ABSTRACT

This document describes a prototype system for the receive signal chain of an ultrasound system. This prototype system is available to customers as an evaluation module that can be ordered from the Texas Instruments Web site.

Ultrasound systems use an array of receivers to produce a high-definition image by time-shifting, scaling, and summing reflected signals. This application report describes a prototype system, available as an evaluation module on the TI Web site, for the *receive chain* of the ultrasound system. This chain consists of the LNA (low noise amplifier), TGC (time gain control), filter, and ADC (analog-to-digital converter), as well as the clock generation for the ADC function (see Figure 1).

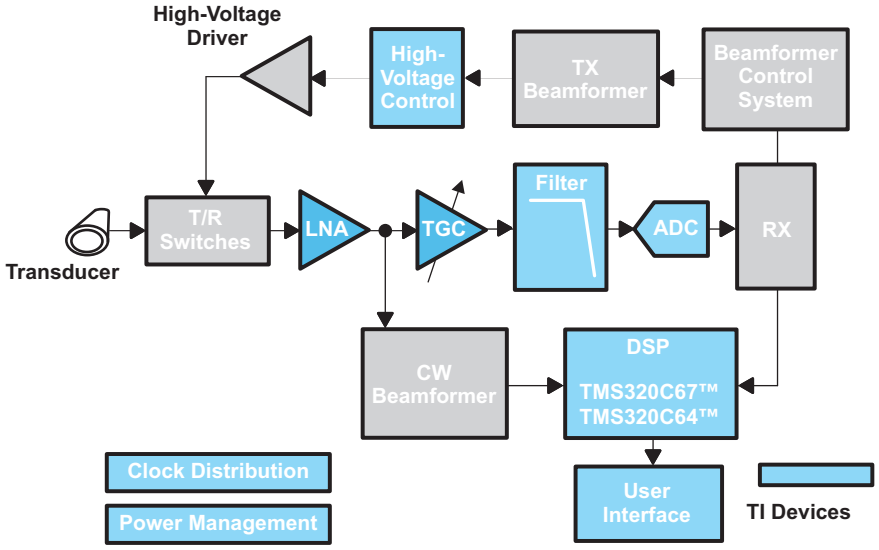

Figure 1. Ultrasound System Block Diagram

At the start of a scan, a pulse is generated and transmitted from an array of transducer elements. Immediately after the transmission, the T/R switches change to receive mode to allow the signal to be received and amplified by the LNA and TGC blocks. The LNA provides a low-noise fixed gain, whereas the TGC function allows the gain to be increased with time to compensate for the increased attenuation of the signal as it passes through the body. The amplified signal then is filtered to improve its signal-to-noise ratio and passed on to the ADC.

The block diagram of the evaluation module, the TI-TUS5000EVM, is shown in Figure 2. The input signals from the T/R switches are amplified through four, 2-channel VCA2615 devices. Each of the channels in the device has a low-noise preamplifier followed by a variable-gain stage. Independent outputs are provided after the preamplifier function (before the variable-gain stage) to provide the CW (continuous wave) beamformer function with an input signal. The single-supply VCA2615 provides an excellent input-referred noise of 0.7 nV/$\sqrt{\text{Hz}}$ and a 52-dB gain control range to accommodate large signal attenuations, extending the range into the body.

The output of the VCA2615 is filtered through a discrete low-pass filter and passed to the 8-channel, 12-bit ADC converter, the ADS5272. The low-power ADS5272 features single-supply operation, contains internal references to simplify system design, and has serial LVDS outputs, which reduce the number of output signals needed and the switching noise.

The ADS5272 is a member of a family of ADCs that give the user options of resolution (10- and 12-bit) and sampling speeds (20-to-70 MSPS) to allow the system to be tailored to the end-application. The 71-dB SNR of the 12-bit ADS5272 ensures that it does not limit the resolution of the image.

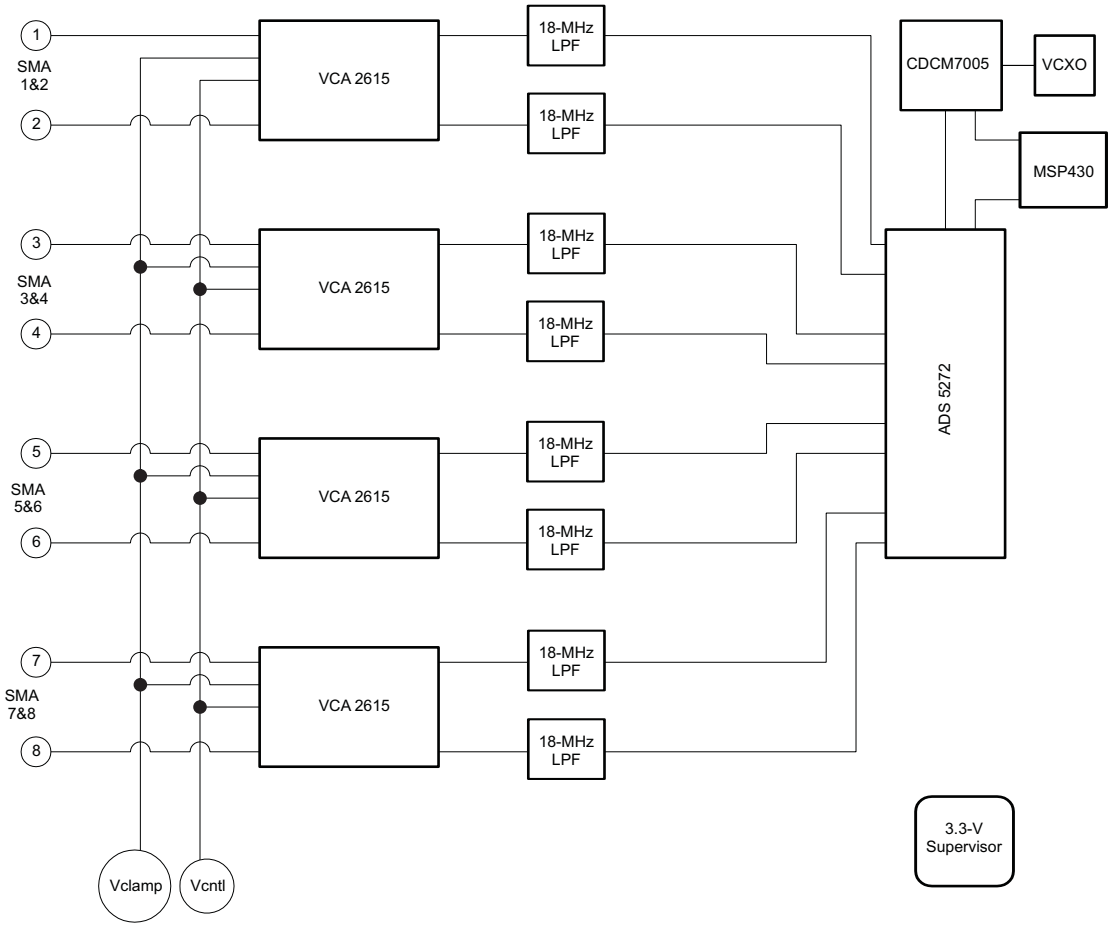

Figure 2. TI-TUS5000EVM Block Diagram

The clocking of the ADC is provided by a CDCM7005 clock synchronizer and jitter cleaner that provides an extremely low jitter clock to maximize the SNR of the ADC.

To aid in evaluation, the LVDS outputs of the ADC go to a standardized connector that can be attached to a deserializer evaluation module, the ADSDeSer-50EVM, also available from TI that allows viewing of the digital output codes on a standard logic analyzer.

References

1. *Information for Medical Applications* solution guide (SLBY108)
2. *VCA2615, Dual Low-Noise Variable Gain-Amplifier With Preamp* data sheet (SBOS316)
3. *ADS5272, 8-Channel, 12-Bit, 65 MSPS ADC with Serial LVDS Interface* data sheet (SBAS324)
4. *CDCM7005, 3.3-V High Performance Clock Synchronizer and Jitter Cleaner* data sheet (SCAS793)
5. ADSDeSer-50EVM Evaluation Module User's Guide (SBAU091)

IMPORTANT NOTICE

Texas Instruments Incorporated and its subsidiaries (TI) reserve the right to make corrections, modifications, enhancements, improvements, and other changes to its products and services at any time and to discontinue any product or service without notice. Customers should obtain the latest relevant information before placing orders and should verify that such information is current and complete. All products are sold subject to TI's terms and conditions of sale supplied at the time of order acknowledgment.

TI warrants performance of its hardware products to the specifications applicable at the time of sale in accordance with TI's standard warranty. Testing and other quality control techniques are used to the extent TI deems necessary to support this warranty. Except where mandated by government requirements, testing of all parameters of each product is not necessarily performed.

TI assumes no liability for applications assistance or customer product design. Customers are responsible for their products and applications using TI components. To minimize the risks associated with customer products and applications, customers should provide adequate design and operating safeguards.

TI does not warrant or represent that any license, either express or implied, is granted under any TI patent right, copyright, mask work right, or other TI intellectual property right relating to any combination, machine, or process in which TI products or services are used. Information published by TI regarding third-party products or services does not constitute a license from TI to use such products or services or a warranty or endorsement thereof. Use of such information may require a license from a third party under the patents or other intellectual property of the third party, or a license from TI under the patents or other intellectual property of TI.

Reproduction of information in TI data books or data sheets is permissible only if reproduction is without alteration and is accompanied by all associated warranties, conditions, limitations, and notices. Reproduction of this information with alteration is an unfair and deceptive business practice. TI is not responsible or liable for such altered documentation.

Resale of TI products or services with statements different from or beyond the parameters stated by TI for that product or service voids all express and any implied warranties for the associated TI product or service and is an unfair and deceptive business practice. TI is not responsible or liable for any such statements.

Following are URLs where you can obtain information on other Texas Instruments products and application solutions:

Products		**Applications**	
Amplifiers	amplifier.ti.com	Audio	www.ti.com/audio
Data Converters	dataconverter.ti.com	Automotive	www.ti.com/automotive
DSP	dsp.ti.com	Broadband	www.ti.com/broadband
Interface	interface.ti.com	Digital Control	www.ti.com/digitalcontrol
Logic	logic.ti.com	Military	www.ti.com/military
Power Mgmt	power.ti.com	Optical Networking	www.ti.com/opticalnetwork
Microcontrollers	microcontroller.ti.com	Security	www.ti.com/security
Low Power Wireless	www.ti.com/lpw	Telephony	www.ti.com/telephony
		Video & Imaging	www.ti.com/video
		Wireless	www.ti.com/wireless

Mailing Address: Texas Instruments
Post Office Box 655303 Dallas, Texas 75265

Copyright © 2006, Texas Instruments Incorporated